# SRC350

## SRC350 ROUGH-TERRAIN CRANE
## 35 TONS LIFTING CAPACITY

Quality Changes the World

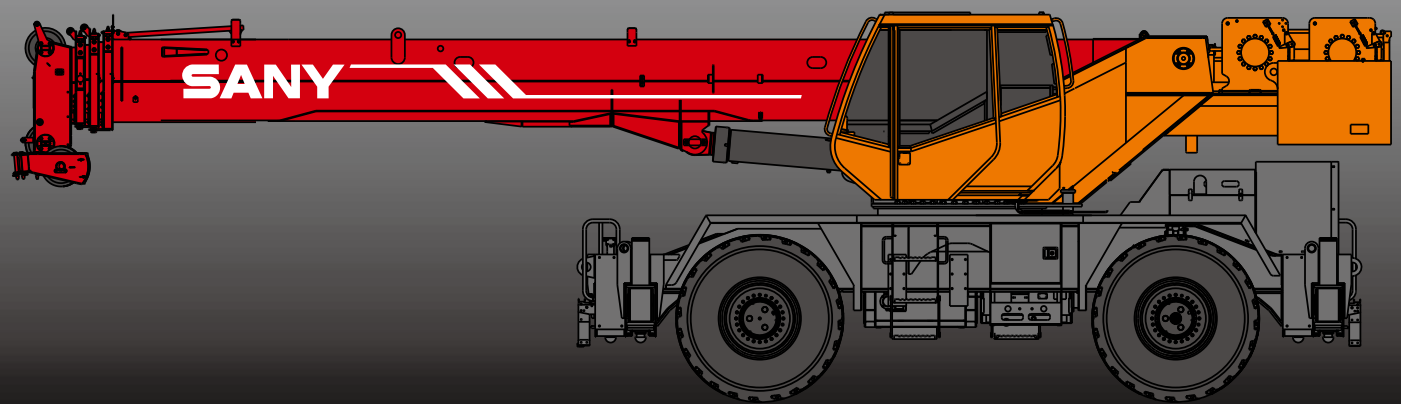


SANY

SANY Automobile Hoisting Machinery is one of the core business unit of Sany Heavy Industry, mainly engaged in the research and development of high end, mid to large tonnage crane series, including mobile crane, crawler crane, tower crane and loader crane. It has two industrial parks in Ningxiang and Huzhou, since entering the market, the products of Sany Automobile Hoisting Machinery have received worldwide recognition with advanced technology, lean manufacturing, high reliability and excellent service.

# SANY ROUGH-TERRAIN CRANE

## CONTENT



- Cab
- Hydraulic system
- Control system
- Telescopic system
- Luffing system
- Slewing
- Counterweight
- Safety system
- Hoist system
- Carrier frame
- Outriggers
- Engine
- Transmission system
- Drive/Steer
- Axles
- Tyres
- Brakes system
- Electrical system
- Suspension system
- Telescopic boom
- Lattice jibs
- Superlift devices
- Luffing lattice jib
- winch mechanism:






### Excellent traveling capacity and high-performance chassis system

Four-wheel drive is applied with four steering modes to provide good mobility. Trafficability and comfortableness of the complex road condition is improved thanks to its Min. turning radius of no more than 6.2m with 4-wheel steering.

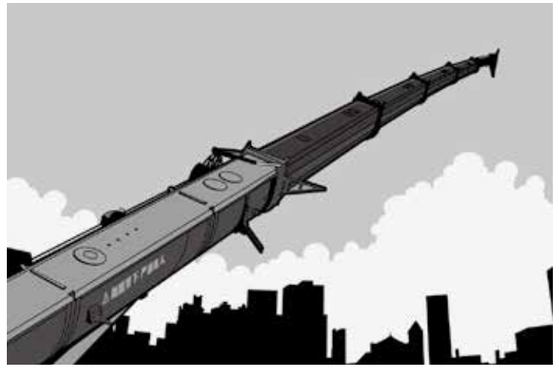

### Ultra long and super strong boom system

Four-section boom of high strength steel structure and optimized U-shaped section, reducing weight and improving safety significantly. Jib mounting angles are 0°, 15°, and 30°,which ensure fast and convenient change-over between different operating conditions so as to improve working efficiency of the machine.


### Highly efficient and unique hydraulic system

Hydraulic system load feedback and constant power control is applied to provide strong lifting capacity and good micro-mobility. Unique steering buffer design guarantees smooth braking operation.


### Safe and reliable control system

Self-developed controller SYMC specially for engineering machinery is configured. The application of CAN-bus fully digital network control technology ensures stable control signal, simple harness and high reliability. It can feedback the data information and monitor the working condition of whole crane in real-time. Load moment limiter configured with comprehensive intelligent protection system is adopted with precision within 10%. The adoption of comprehensive logic and interlock control system ensures more safe and reliable operation.

## Introduction

### Cab

- The self-made cab adopts ergonomic design with sliding door, safety glass, anti-corrosion steel, soft interior decoration, large interior space, panoramic sunroof and adjustable seats, air conditioner and electric window wiper etc. to provide easier and more comfortable operation. Load moment limiter display is configured to achieve the combination of main console and operating display system, making all operating condition data of lifting operation clear at a glance.

### Hydraulic system

- High-quality key hydraulic components such as main oil pump, rotary pump, main valve, winch motor and balancing parts etc. are adopted to achieve stable and reliable operation of the hydraulic system. Superior operation performance is guaranteed by accurate parameter matching. Through the adoption of load sensitive variable displacement piston pump, pump displacement can be adjusted in real-time, achieving high-precision flow control with no energy loss during operation.
- Main valve has flow compensation and load feedback control function. It significantly enhances control stability for single action and combined action under different operation conditions.
- Winch adopts electronically controlled variable motor to ensure high operation efficiency. Max. single line speed of main and auxiliary winches is up to 140m/min;
- Slewing system is equipped with the integrated slewing buffer valve with free slipping function to ensure more stable starting and control of the slewing operation and excellent micro-mobility.
- Hydraulic oil tank capacity: 530L.

### Control system

- CAN-bus instrument: CAN-bus instrument with a combined intelligent control electrical system is used for easy reading of the traveling parameters at any time. Engine fault warning function enables convenient and fast maintenance.
- With full security protection system, main and auxiliary winches are equipped with over-roll out limiter and height limiters to prevent over-rolling out and over-hoisting of steel rope, including tip-over and limit angle protection.
- Load moment limiter: The adoption of highly intelligent load moment limiter system can comprehensively protect lifting operation, ensuring accurate, stable and comfort operation.

### Telescopic system

- Four-section boom is applied with basic boom length of 10m, full-extended boom length of 31.5m, jib length of 13.7m and fully extended boom tip height of 33.9m respectively, Max. tip height is 47.4m including jib. It is made of fine grain high-strength steel with U-shaped cross section and with telescopic operation controlled independently by single cylinder rope.

### Luffing system

- Dead-weight luffing provides more stable luffing operation at low energy loss. Dual-action single piston hydraulic pressure cylinder with safety valve is adopted. Luffing angle range is -2°—78°.





## Introduction

### Slewing system

- 360° rotation can be achieved with Max. slewing speed of 2.7r/min. Hydraulic controlled proportional speed adjustment is applied, providing stable and reliable operation of the system. Unique slewing buffer design ensures more stable braking operation.

### Counterweight

- The total weight of fixed counterweight is 4000kg, no flexible counterweight.

### Safety system

- Load moment limiter: Load moment limiter calculation system based on lifting load mechanical model is established using an analytical mechanics method with rated lifting accuracy up to 0-10% through on-line non-load calibration, providing full protection to lifting operation. In case of overload operation, system will automatically issue an alarm to provide safety protection for manipulation.
- Hydraulic system is configured with the balance valve, overflow valve and two-way hydraulic lock etc. components, thus achieving stable and reliable operation of the hydraulic system.
- Main and auxiliary winches are equipped with over roll-out limiter to prevent over rolling-out of wire rope.
- Boom and jib ends are equipped with height limiters respectively to prevent over-hoisting of wire rope.
- Equipped with length sensor, angle sensor and press sensor to indicate the working condition of whole crane in real-time, giving an alarm and cutting off the dangerous action automatically.

### Hoist system

- The adoption of pump and motor double variable speed control ensures high efficiency and excellent energy saving functionality. With perfect combination of winch balance valve and unique anti-slip technology, heavy load can be lifted and lowered smoothly. High strength, anti-swirl steel wire is equipped for high-precision hoisting positioning.
- Equipped with one 360kg main hook and one 160kg auxiliary hook, and main and auxiliary hook steel rope diameters are 16mm, the rope length is 165m and 135m respectively.

### Carrier frame

- Carrier frame is of box-type structure that is welded with high-strength steel plate, featuring high lifting capacity.

## Introduction

| | |
|---|---|
| **Outriggers** | ■ H-type outrigger structure and 4-point support is adopted with Max. span up to 6.15m×6.15m,featuring easy operation and high stability. Fine grain high strength steel material is adopted and dual-direction hydraulic lock is used for the protection of vertical cylinder of outrigger. |
| **Engine** | ■ Type: Inline six-cylinder, water cooled, supercharged and inter-cooling diesel engine<br>■ Rated power: 119kw/2500r/min<br>■ Environment-protection: Emission complies with Tier III standard<br>■ Capacity of fuel tank: 300L |
| **Transmission system** | ■ Transmission case: Automatic transmission case. There are six forward gears and six backward gears in gearbox. The speed ratio range is large which meets the requirements of low gradeability speed and high traveling speed.<br>■ Transmission shaft: With optimized arrangement of the transmission shaft, the transmission is stable and reliable. |
| **Drive/Steer** | ■ 4×4 drive ways and full hydraulic power steering system with front wheel steering, rear wheel steering, four-wheel steering, and crab traveling modes. |
| **Axles** | ■ Axles can be flexibly controlled with two-axle designed for chassis. Front and rear axles drive are applied to ensure good power performance. |
| **Tyres** | ■ Tyres type 4* 20.5R25 ★★ 177B193A2 TL ET5A |
| **Brakes system** | ■ Double-circuit braking system is adopted, if one circuit fails, the other circuit can ensure normal operation, thus improving the safety and reliability of brake system. |
| **Electrical system** | ■ With 24V free maintenance battery and mechanical power main switch, power of the whole machine can be cut off manually. |





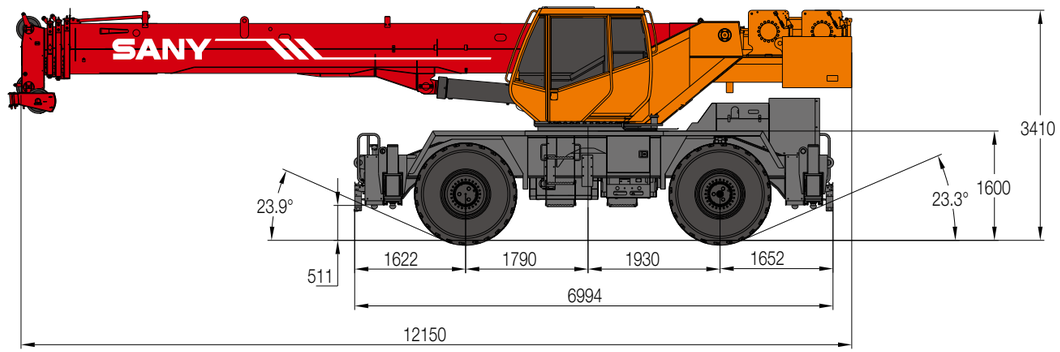


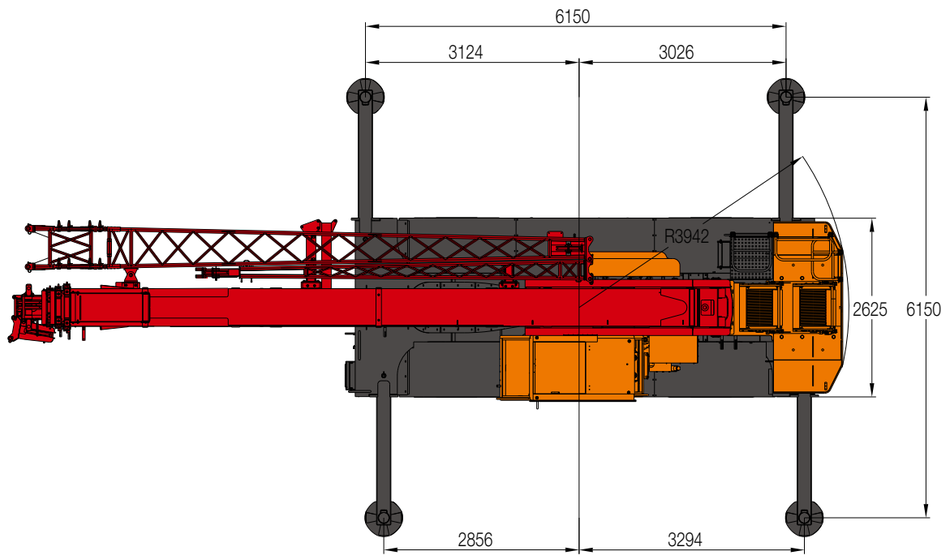

# DIMENSION

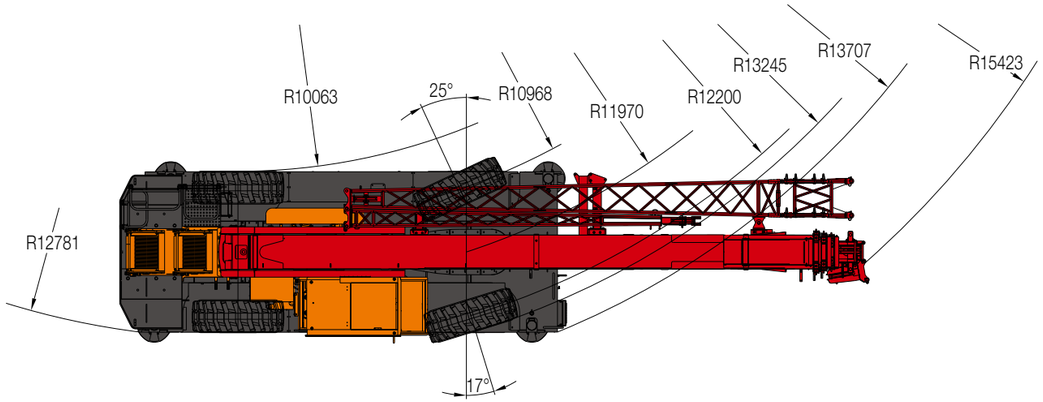


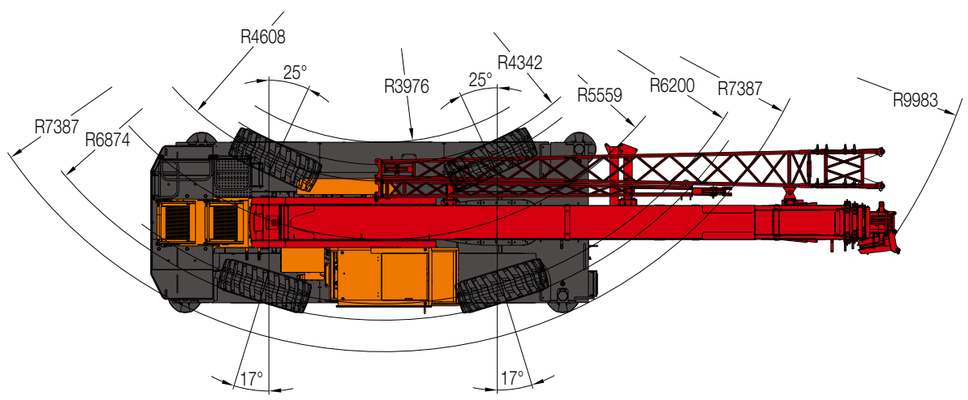






# TECHNICAL PARAMETER

| Type | Item | | Parameter |
|---|---|---|---|
| Capacity | Max. lifting capacity | | 35 t |
| Dimensions | Overall length | | 12150mm |
| | Overall width | | 2625 mm |
| | Overall height | | 3410 mm |
| | Axle distance | | 3720 mm |
| Weight | Overall weight | | 32300 kg |
| | Axle load | Front axle load | 16640 kg |
| | | Rear axle load | 15660 kg |
| | Rated power | | 119 kW/ 2500 rpm |
| | Rated torque | | 731 N.m/ 1500 rpm |
| Traveling | Max.traveling speed | | 37 km/h |
| | Turning radius | Min.turning radius | 12.2/6.2 m |
| | Wheel formula | | 4× 4 |
| | Min.ground clearance | | 400 mm |
| | approach angle | | 23.9 ° |
| | Departure angle | | 23.3 ° |
| | Max.gradeability | | 75% |
| | Fuel consumption per 100km | | ≤55 L |
| Main Performance Data | Temperature range | | – 20 °C ~ + 46°C |
| | Min.rated range | | 3.05 m |
| | Tail slewing radius of swingtable | | 3.94 m |
| | Boom section | | 4 |
| | Boom shape | | U-shaped |
| | Max.lifting moment | Base boom | 1139 kN·m |
| | | Full-extend boom | 743 kN·m |
| | | Full-extend boom+jib | 330 kN·m |
| | Boom length | Base boom | 10 m |
| | | Full-extend boom | 31.5 m |
| | | Full-extend boom+jib | 45.2 m |
| | Outrigger span (Longitudinal×Transversal) | | 6.15 × 6.15 m |
| | Jib offset | | 0 °, 15 °, 30 ° |
| Working speed | Max.single rope lifting speed of main winch (no load) | | 140 m/min |
| | Max.single rope lifting speed of auxiliary winch (no load) | | 140 m/min |
| | Full extension/retraction time of boom | | 55 / 39 s |
| | Full lifting/descending time of boom | | 43 / 57 s |
| | Slewing speed | | 2.7 r/min |
| Aircondition | Aircondition in cab | | Cooling/Heating & Cooling |

## SRC350 Working Ranges

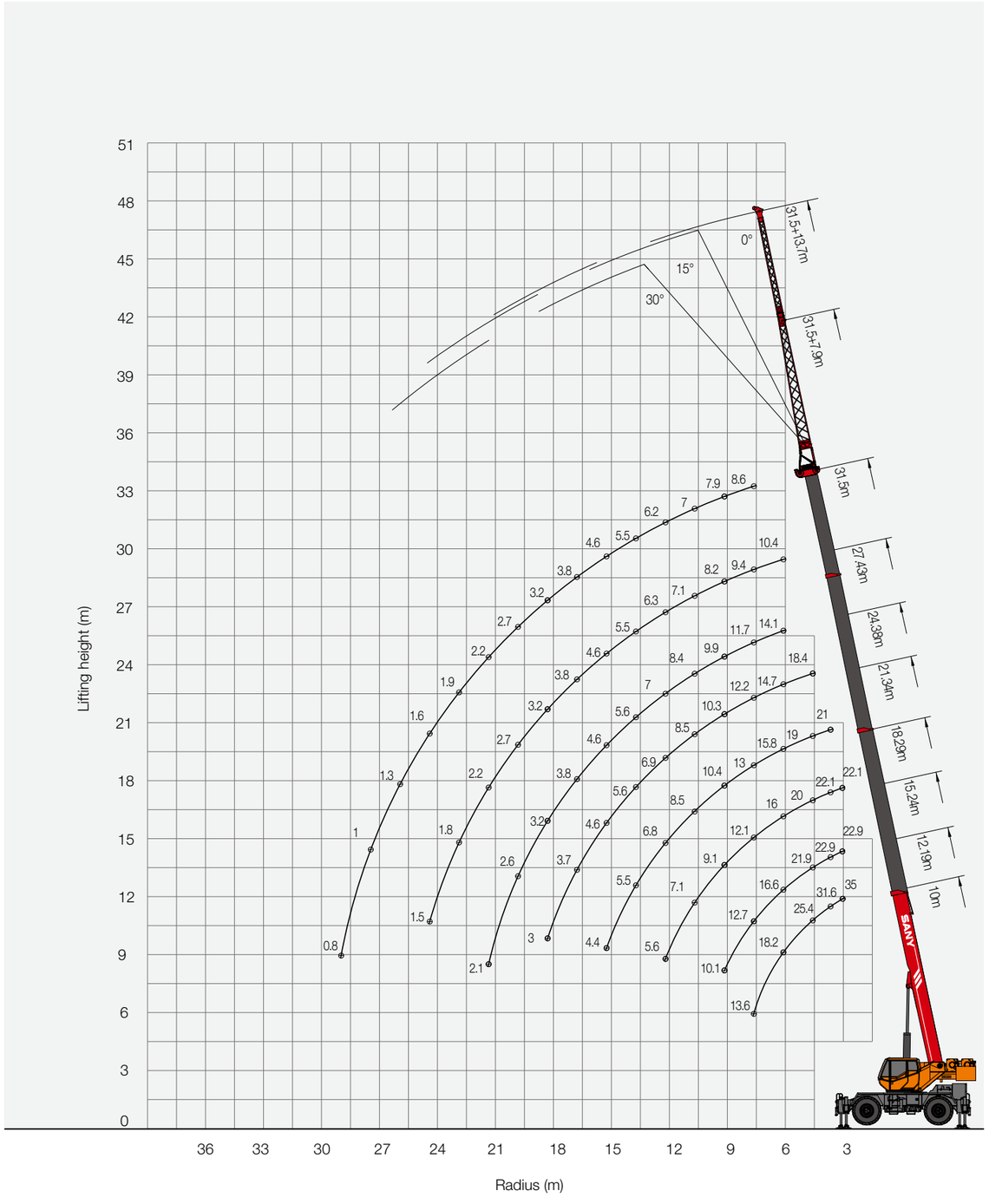




**Prerequisites:**
**① Boom operating conditions(fully extended boom length),min. length is 10m and max.length is 31.5m**
**② The span of outriggers is 6.15m×6.15m**
**③ 360°rotation is applied**
**④ Counterweight is 4T**

| Working range (m) | Main boom | | | | | | | | Working range (m) |
|---|---|---|---|---|---|---|---|---|---|
| | 10m | 12.19m | 15.24m | 18.29m | 21.34m | 24.38m | 27.43m | 31.5m | |
| 3.05 | 35000 | 22997 | 22100 | | | | | | 3.05 |
| 3.66 | 31610 | 22997 | 22100 | 21050 | | | | | 3.66 |
| 4.58 | 25400 | 21954 | 20000 | 19000 | 18432 | | | | 4.58 |
| 6.10 | 18200 | 16670 | 16000 | 15800 | 14764 | 14145 | 10400 | | 6.10 |
| 7.63 | 13630 | 12764 | 12156 | 13050 | 12288 | 11716 | 9400 | 8600 | 7.63 |
| 9.15 | | 10121 | 9131 | 10407 | 10383 | 9906 | 8250 | 7900 | 9.15 |
| 10.68 | | | 7109 | 8525 | 8597 | 8478 | 7100 | 7050 | 10.68 |
| 12.20 | | | 5661 | 6882 | 6977 | 7049 | 6300 | 6200 | 12.20 |
| 13.73 | | | | 5549 | 5620 | 5668 | 5590 | 5520 | 13.73 |
| 15.25 | | | | 4480 | 4610 | 4653 | 4660 | 4660 | 15.25 |
| 16.78 | | | | | 3777 | 3848 | 3860 | 3870 | 16.78 |
| 18.30 | | | | | 3097 | 3201 | 3220 | 3240 | 18.30 |
| 19.83 | | | | | | 2644 | 2700 | 2720 | 19.83 |
| 21.35 | | | | | | 2180 | 2260 | 2280 | 21.35 |
| 22.88 | | | | | | | 1860 | 1920 | 22.88 |
| 24.40 | | | | | | | 1530 | 1600 | 24.40 |
| 25.93 | | | | | | | | 1300 | 25.93 |
| 27.45 | | | | | | | | 1050 | 27.45 |
| 28.98 | | | | | | | | 820 | 28.98 |
| Min.elevation angle(°) | / | / | / | / | / | / | / | / | Min.elevation angle(°) |
| Number of parts of line | 8 | 6 | 6 | 4 | 4 | 4 | 4 | 3 | Number of parts of line |

**Prerequisites:**
**① Boom operating conditions(fully extended boom length),min. length is 10m and max.length is 31.5m**
**② The span of outriggers is 6.15m×4.27m**
**③ 360°rotation is applied**
**④ Counterweight is 4T**

| Working range (m) | Main boom | | | | | | | | Working range (m) |
|---|---|---|---|---|---|---|---|---|---|
| | 10m | 12.19m | 15.24m | 18.29m | 21.34m | 24.38m | 27.43m | 31.5m | |
| 3.05 | 35000 | 22997 | 22100 | | | | | | 3.05 |
| 3.66 | 30050 | 22997 | 22100 | 21050 | | | | | 3.66 |
| 4.58 | 22000 | 19000 | 18200 | 17500 | 18432 | | | | 4.58 |
| 6.10 | 13600 | 13650 | 13700 | 13900 | 14100 | 14145 | 10400 | | 6.10 |
| 7.63 | 8799 | 9215 | 9597 | 9853 | 10038 | 10179 | 8900 | 8600 | 7.63 |
| 9.15 | | 6460 | 6807 | 7040 | 7207 | 7335 | 7300 | 7100 | 9.15 |
| 10.68 | | | 5014 | 5232 | 5388 | 5506 | 5597 | 5693 | 10.68 |
| 12.20 | | | 3766 | 3972 | 4120 | 4232 | 4319 | 4408 | 12.20 |
| 13.73 | | | | 3044 | 3186 | 3293 | 3376 | 3462 | 13.73 |
| 15.25 | | | | 2332 | 2469 | 2573 | 2653 | 2736 | 15.25 |
| 16.78 | | | | | 1902 | 2003 | 2081 | 2161 | 16.78 |
| 18.30 | | | | | 1442 | 1541 | 1616 | 1694 | 18.30 |
| 19.83 | | | | | | 1158 | 1232 | 1308 | 19.83 |
| 21.35 | | | | | | 837 | 909 | 984 | 21.35 |
| 22.88 | | | | | | | 634 | 707 | 22.88 |
| Min.elevation angle(°) | / | / | / | / | / | 0° | 22° | 35° | Min.elevation angle(°) |
| Number of parts of line | 8 | 6 | 6 | 4 | 4 | 4 | 4 | 3 | Number of parts of line |

**Prerequisites:**
**① Boom operating conditions(fully extended boom length),min. length is 10m and max.length is 31.5m**
**② The span of outriggers is 6.15m×2.39m**
**③ 360°rotation is applied**
**④ Counterweight is 4T**

| Working range (m) | Main boom | | | | | | | | Working range (m) |
|---|---|---|---|---|---|---|---|---|---|
| | 10m | 12.19m | 15.24m | 18.29m | 21.34m | 24.38m | 27.43m | 31.5m | |
| 3.05 | 23600 | 22700 | 22100 | | | | | | 3.05 |
| 3.66 | 15484 | 16025 | 16520 | 16853 | | | | | 3.66 |
| 4.58 | 10286 | 10748 | 11170 | 11454 | 11659 | | | | 4.58 |
| 6.10 | 5933 | 6329 | 6690 | 6932 | 7106 | 7239 | 7341 | | 6.10 |
| 7.63 | 3648 | 4007 | 4336 | 4555 | 4713 | 4833 | 4925 | 5021 | 7.63 |
| 9.15 | | 2576 | 2884 | 3090 | 3238 | 3350 | 3435 | 3524 | 9.15 |
| 10.68 | | | 1900 | 2097 | 2237 | 2344 | 2425 | 2509 | 10.68 |
| 12.20 | | | 1190 | 1379 | 1514 | 1617 | 1695 | 1776 | 12.20 |
| 13.73 | | | | 836 | 967 | 1067 | 1143 | 1221 | 13.73 |
| 15.25 | | | | | 539 | 636 | 710 | 786 | 15.25 |
| Min.elevation angle(°) | / | / | / | 23° | 36° | 44° | 49° | 55° | Min.elevation angle(°) |
| Number of parts of line | 6 | 6 | 6 | 4 | 4 | 4 | 4 | 3 | Number of parts of line |

**Prerequisites:**
**① Boom operating conditions(boom length),min. length is 10m and max.length is 18.29m**
**② With lifting load traveling (right ahead) ≦ 4km/h**
**③ Counterweight is 4T**

| Working range (m) | Main boom | | | | Working range (m) |
|---|---|---|---|---|---|
| | 10m | 12.19m | 15.24m | 18.29m | |
| 3.05 | 12315 | 12202 | | | 3.05 |
| 3.66 | 10591 | 10546 | | | 3.66 |
| 4.58 | 8596 | 8664 | 8800 | | 4.58 |
| 6.10 | 6214 | 6441 | 6577 | 6600 | 6.10 |
| 7.63 | 4581 | 4876 | 5058 | 5080 | 7.63 |
| 9.15 | | 3607 | 3910 | 3987 | 9.15 |
| 10.68 | | | 2689 | 2883 | 10.68 |
| 12.20 | | | 1824 | 2011 | 12.20 |
| 13.73 | | | | 1362 | 13.73 |
| 15.25 | | | | 860 | 15.25 |
| Min.elevation angle(°) | / | / | / | / | Min.elevation angle(°) |
| Number of parts of line | 4 | 4 | 4 | 4 | Number of parts of line |





**Prerequisites:**
**① Boom operating conditions(boom length),min.length is 10m and max.length is 18.29m**
**② With tyre static lifting load**
**③ 360° rotation is applied**
**④ Counterweight is 4T**

| Working range (m) | Main boom | | | | Working range (m) |
|---|---|---|---|---|---|
| | 10m | 12.19m | 15.24m | 18.29m | |
| 3.05 | 10909 | 10932 | 10433 | | 3.05 |
| 3.66 | 8907 | 9092 | 8907 | | 3.66 |
| 4.58 | 6917 | 7053 | 7303 | 6305 | 4.58 |
| 6.10 | 3962 | 4255 | 4472 | 4472 | 6.10 |
| 7.63 | 2188 | 2525 | 2833 | 2953 | 7.63 |
| 9.15 | | 1402 | 1693 | 1888 | 9.15 |
| 10.68 | | | 914 | 1101 | 10.68 |
| 12.20 | | | | 530 | 12.20 |
| Min.elevation angle(°) | / | / | / | / | Min.elevation angle(°) |
| Number of parts of line | 4 | 4 | 4 | 4 | Number of parts of line |

**Prerequisites:**
**① Boom operating conditions(fully extended boom length+jib length ),max.length is 31.5m+13.7m**
**② The span of outriggers is 6.15m×6.15m**
**③ 360°rotation is applied**
**④ Counterweight is 4T**

| Working angle (°) | Main boom+jib | | | Working angle (°) |
|---|---|---|---|---|
| | 0° | 15° | 30° | |
| 78° | 2250 | 1250 | 900 | 78° |
| 77° | 2150 | 1200 | 900 | 77° |
| 75° | 1950 | 1150 | 850 | 75° |
| 73° | 1750 | 1100 | 800 | 73° |
| 71° | 1600 | 1050 | 750 | 71° |
| 68° | 1450 | 1000 | 700 | 68° |
| 66° | 1350 | 950 | 660 | 66° |
| 63° | 1150 | 850 | 600 | 63° |
| 61° | 1050 | 750 | 550 | 61° |
| 58° | 650 | 600 | 500 | 58° |
| 56° | 500 | | | 56° |
| Min.elevation angle(°) | 34° | 37° | 39° | Min.elevation angle(°) |

# LOAD CHART

**Prerequisites:**
**① Boom operating conditions(fully extended boom length+jib length ),max.length is 31.5m+7.9m**
**② The span of outriggers is 6.15m×6.15m**
**③ 360°rotation is applied**
**④ Counterweight is 4T**

| Working angle (°) | Main boom+jib | | | Working angle (°) |
|---|---|---|---|---|
| | 0° | 15° | 30° | |
| 78° | 3500 | 2150 | 1650 | 78° |
| 77° | 3300 | 2100 | 1600 | 77° |
| 75° | 3100 | 2000 | 1550 | 75° |
| 73° | 2800 | 1900 | 1500 | 73° |
| 71° | 2600 | 1800 | 1400 | 71° |
| 68° | 2300 | 1650 | 1250 | 68° |
| 66° | 2100 | 1550 | 1150 | 66° |
| 63° | 1800 | 1350 | 1000 | 63° |
| 61° | 1500 | 1200 | 850 | 61° |
| 58° | 1100 | 950 | 650 | 58° |
| 56° | 700 | 650 | 500 | 56° |
| Min.elevation angle(°) | 32° | 34° | 35° | Min.elevation angle(°) |

1. Values listed in the table refer to rated lifting capacity measured at flat and solid gound under the lever state of the crane.
2. Value above heavy line shall be determined by strength of the crane and under this line shall be determined by stability of the crane.
3. Rated load values determined by stability shall comply with ISO 4305.
4. Rated lifting capacity listed in the table included weights of lifting hooks (360kg of main hook and 160kg of auxiliary hook)and hangers.
5. Rated lifting capacity with pulley at boom tip shall not exceed 5240kg.
6. If actual boom length and range are between two values specified in the table, larger value will determine the lifting capacity.
7. When traveling with cargo on the crane, the permitted fastest speed is 4km/h. Never travel the crane with cargo over 60m within any 30 minutes.
8. Never travel the crane over 16km within 30min. Stopping the crane for 20min after every 30min traveling can prevent the tires from being overheated.





# WHEEL CRANE FAMILY MAP

## TRUCK CRANE


STC200
Maximum Load Capacity: 20t
Telescopic Boom: 4 Sections, 10.6-33m


STC250
Maximum Load Capacity: 25t
Telescopic Boom: 4 Sections, 10.65-33.5m


STC250H
Maximum Load Capacity: 25t
Telescopic Boom: 5 Sections, 10.5-39.5m


STC300S
Maximum Load Capacity: 30t
Telescopic Boom: 5 Sections, 10.6-40.5m


STC300TH
Maximum Load Capacity: 30t
Telescopic Boom: 4 Sections, 10.6-33.5m


STC300H
Maximum Load Capacity: 30t
Telescopic Boom: 5 Sections, 10.5-39.5m


STC500
Maximum Load Capacity: 50t
Telescopic Boom: 5 Sections, 11.5-43m


STC550
Maximum Load Capacity: 55t
Telescopic Boom: 5 Sections, 11.5-43m


STC600S
Maximum Load Capacity: 60t
Telescopic Boom: 5 Sections, 11.3-43.5m


STC750
Maximum Load Capacity: 75t
Telescopic Boom: 5 Sections, 11.8-45m


STC800S
Maximum Load Capacity: 80t
Telescopic Boom: 5 Sections, 12.2-47m


STC1000
Maximum Load Capacity: 100t
Telescopic Boom: 5 Sections, 13.5-52m


STC1000C
Maximum Load Capacity: 100t
Telescopic Boom: 6 Sections, 13.25-60m


STC1000S
Maximum Load Capacity: 100t
Telescopic Boom: 5 Sections, 12.26-56m


STC1200S
Maximum Load Capacity: 120t
Telescopic Boom: 7 Sections, 12.6-63.5m


STC1300C
Maximum Load Capacity: 130t
Telescopic Boom: 6 Sections, 13.3-60m


STC1600
Maximum Load Capacity: 160t
Telescopic Boom: 6 Sections, 13.4-62m


STC2200
Maximum Load Capacity: 220t
Telescopic Boom: 6 Sections, 14.35-68m

## ALL TERRAIN CRANE


SAC1800
Maximum Load Capacity: 180t
Telescopic Boom: 6 Sections, 13.5-62m


SAC2200
Maximum Load Capacity: 220t
Telescopic Boom: 6 Sections, 13.5-62m


SAC2600
Maximum Load Capacity: 260t
Telescopic Boom: 6 Sections, 15.65-73m


SAC3000
Maximum Load Capacity: 300t
Telescopic Boom: 7 Sections, 15.4-83m


SAC3500
Maximum Load Capacity: 350t
Telescopic Boom: 6 Sections, 15.2-70m


SAC6000
Maximum Load Capacity: 600t
Telescopic Boom: 7 Sections, 17.1-90m

## ROUGH-TERRAIN CRANE


SRC250
Maximum Load Capacity: 25t
Telescopic Boom: 4 Sections, 9.9-31.5m


SRC350
Maximum Load Capacity: 35t
Telescopic Boom: 4 Sections, 10-31.5m


SRC550
Maximum Load Capacity: 55t
Telescopic Boom: 4 Sections, 11.25-34.5m


SRC550H
Maximum Load Capacity: 55t
Telescopic Boom: 5 Sections, 11.5-43m


SRC750
Maximum Load Capacity: 75t
Telescopic Boom: 5 Sections, 11.8-45m


SRC1200
Maximum Load Capacity: 120t
Telescopic Boom: 5 Sections, 13-49m

Notes

Quality Changes the World

## SANY AUTOMOBILE HOISTING MACHINERY

Address: SANY Industrial Park, Jinzhou Development Zone,
Changsha, Hunan, China.
Service Hotline: 4006098318
Email: crd@sany.com.cn
For more information, please visit: www.sanygroup.com

For our consistent improvement in techonology, specifications may change without notice.
The machines illustrated may show optional equipment which can be supplied at additional cost.

Version: 2015.08

**Distributed By:**