SRC250A1

SRC250A1 ROUGH-TERRAIN CRANE
25 TONS LIFTING CAPACITY

Quality Changes the World

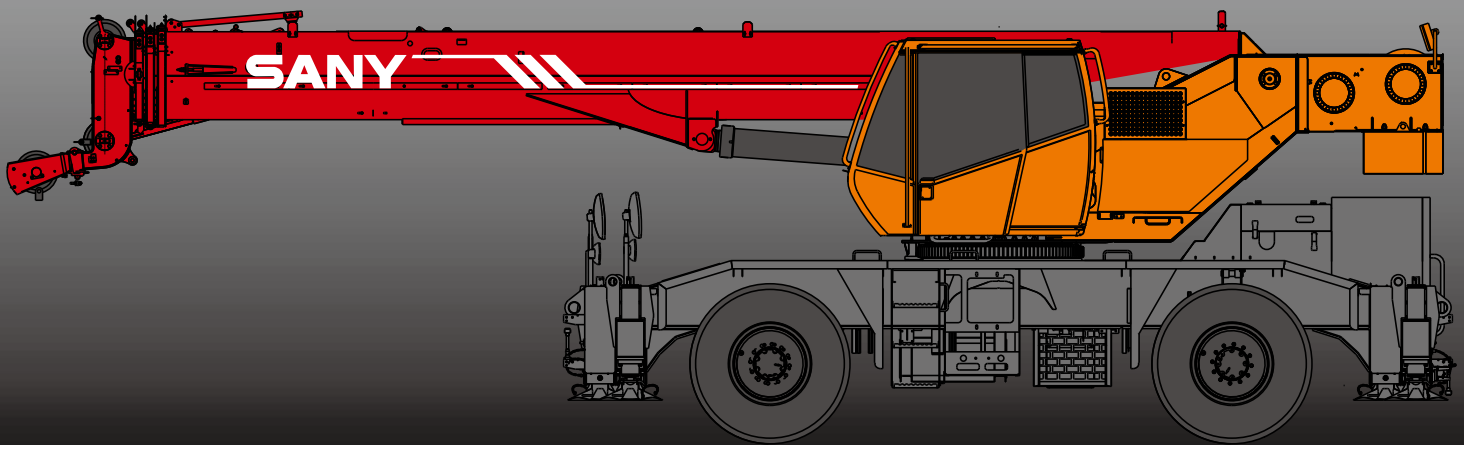

SANY

SANY Automobile Hoisting Machinery is one of the core business unit of Sany Heavy Industry, mainly engaged in the research and development of high end, mid to large tonnage crane series, including mobile crane, crawler crane, tower crane and loader crane. It has two industrial parks in Ningxiang and Huzhou, since entering the market, the products of Sany Automobile Hoisting Machinery have received worldwide recognition with advanced technology, lean manufacturing, high reliability and excellent service.

SANY ROUGH-TERRAIN CRANE

CONTENT

- Cab
- Hydraulic system
- Control system
- Telescopic system
- Luffing system
- Slewing
- Counterweight
- Safety system
- Hoist system
- Carrier frame
- Outriggers
- Engine
- Transmission system
- Drive/Steer
- Axles
- Tyres
- Brakes system
- Electrical system
- Suspension system
- Telescopic boom
- Lattice jibs
- Superlift devices
- Luffing lattice jib
- winch mechanism:

Excellent traveling capacity and high-performance chassis system

Four-wheel drive is applied with full hydraulic power steering system, and with four steering modes to provide good mobility. Trafficability and comfortableness of the complex road condition is improved thanks to its Min. turning radius of less than 5.5m.

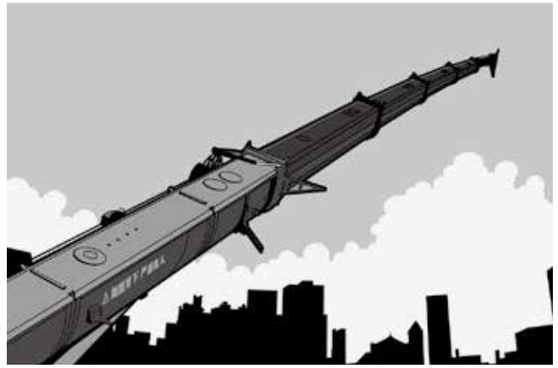

Ultra long and super strong boom system

Four-section boom with high strength steel structure and optimized U-shaped section, reducing weight and improving safety significantly. Jib mounting angles are 0°, 15°, and 30° which ensure fast and convenient change-over between different operating conditions so as to improve working efficiency of the machine.

Highly effective and original hydraulic system

Hydraulic system load feedback and constant power control is applied to provide strong lifting capacity and good micro-mobility. Unique steering buffer design guarantees smooth braking operation.

Safe and reliable control system

Self-developed controller SYMC specially for engineering machinery is configured. The application of CAN-bus fully digital network control technology ensures stable control signal, simple harness and high reliability. It can feedback the data information and monitor the working condition of whole crane in real-time. Load moment limiter configuring with comprehensive intelligent protection system is adopted with precision within 0-10%. The adoption of comprehensive logic and interlock control system ensures more safe and reliable operation.

Introduction

Cab

- The self-made cab adopts ergonomic design with sliding door, safety glass, anti-corrosion steel, soft interior decoration, large interior space, panoramic sunroof and adjustable seats, air conditioner and electric window wiper etc. to provide easier and more comfortable operation. Meticulously designed industrial style and novel appearance are applied for cab. Load moment limiter display is configured to achieve the combination of main console and operating display system, making all operating condition data of lighting operation clear at a glance.

Hydraulic system

- High-quality key hydraulic components such as main oil pump, rotary pump, main valve, winch motor, and balancing parts etc. are adopted to achieve stable and reliable operation of the hydraulic system. Superior operation performance is guaranteed by accurate parameter matching.
- Through the adoption of load sensitive variable displacement piston pump, pump displacement can be adjusted in real-time, achieving high-precision flow control, with no energy loss during operation;
- Main valve has flow compensation and load feedback control function. It significantly enhances control stability for single action and combined action under different operation conditions.
- Winch adopts electronically controlled variable motor, to ensure high operation efficiency. Max. single line speeds of main and auxiliary winches is up to 125m/min;
- Slewing system is equipped with the integrated slewing buffer valve, with free slipping function, to ensure more stable starting and control of the slewing operation and excellent micro-mobility.
- Hydraulic oil tank capacity: 570L.

Control system

- CAN-bus instrument: CAN-bus instrument with a combined intelligent control electrical system is used for easy reading of the traveling parameters at any time. Engine fault warning function enables convenient and fast maintenance.
- With full security protection system, main and auxiliary winches are equipped with over-roll out limiter and height limiters to prevent over-rolling out and over-hoisting of steel rope, including tip-over and limit angle protection.
- Load moment limiter: The adoption of highly intelligent load moment limiter system can comprehensively protect lifting operation, ensuring accurate, stable and comfort operation.
- The fault diagnosis system can detect superstructure electricity, hydraulic action, chassis (for major safety failure), engine and gearbox for fault to ensure reliable operation of the crane.

Telescopic system

- Four-section boom is applied with basic boom length of 9.9m, full-extended boom length of 31.5m, jib length of 13.7m and lifting height of fully extended boom length of 32.5m respectively. Max. lifting height is 46.5m including jib. It is made of fine grain high-strength steel, with U-shaped cross section and with telescopic operation controlled independent by double cylinder rope.

Luffing system

- Dead-weight luffing provides more stable luffing operation at low energy loss. Dual-action single piston hydraulic pressure cylinder with safety valve is adopted.
- Luffing angle range is -3° ~ 80°.

Introduction

Slewing system

- 360° rotation can be achieved, with Max. slewing speed of 2.5r/min. Hydraulic controlled proportional speed adjustment is applied, providing stable and reliable operation of the system. Unique slewing buffer design ensures more stable braking operation.

Counterweight

- The total weight of fixed counterweight is 1500kg, no flexible counterweight.

Safety system

- Load moment limiter: Load moment limiter calculation system based on lifting load mechanical model is established using an analytical mechanics method, with rated lifting accuracy up to 0-10% through on-line non-load calibration, providing full protection to lifting operation. In case of overload operation, system will automatically issue an alarm to provide safety protection for manipulation.
- Balance valve, overflow valve, and two-way hydraulic lock etc. components are configured for hydraulic system, thus achieving stable and reliable operation of the hydraulic system.
- Main and auxiliary winches are equipped with over roll-out limiter, to prevent over rolling-out of wire rope.
- Boom and jib ends are equipped with height limiters respectively to prevent over-hoisting of wire rope.
- Boom head is equipped with anemometer, press sensor, to indicate the working condition of whole crane in real-time, giving an alarm and cut off the dangerous action automatically.

Hoist system

- The adoption of pump and motor double variable speed control ensures high efficiency and excellent energy saving functionality. With perfect combination of winch balance valve and unique anti-slip technology, heavy load can lift and lower smoothly. Closed winch brake and winch balance valve effectively prevent imbalance of the hook. High strength, anti-swirl steel wire is equipped for high-precision hoisting positioning.
- Equipped with one 320kg main hook and one 85kg auxiliary hook, and Main and auxiliary hook steel rope diameters are 16mm, the rope length is 175m and 105m respectively.

Carrier frame

- Carrier frame is of box-type structure that is welded with high-strength steel plate, featuring high lifting capacity.

Introduction

Outriggers	■ H-type outrigger structure and 4-point support is adopted, with Max. span up to 6.7m×6.5m. Featuring easy operation and high stability. Fine grain high strength steel material is adopted and dual-direction hydraulic lock is used for the protection of vertical span cylinder.
Engine	■ Type: Inline six-cylinder, water cooled, supercharged and inter-cooling diesel engine ■ Rated power:154kw/2200r/min ■ Environment-protection: Emission complies with StateIII standard ■ Capacity of fuel tank: 300L
Transmission system	■ Transmission case: Manual/Automatic transmission case. There are six gears in gearbox. The speed ratio range is large which meets the requirements of low gradeability speed and high traveling speed. ■ Transmission shaft: With optimized arrangement of the transmission shaft, the transmission is stable and reliable.
Drive/Steer	■ 4×4 drive way is adopted, full hydraulic power steering is applied, having front wheel steering, rear wheel steering, four-wheel steering and crab traveling modes.
Axles	■ Front and rear axles are all slewing drive axles.
Tyres	■ 385R25
Brakes system	■ Double-circuit braking system is adopted, if one circuit fails, the other circuit can ensure normal operation, thus improving the safety and reliability of brake system. ■ Traveling brake: all wheels use the unique slewing brakes and dual-circuit brake system and are equipped with drum brakes. ■ Parking brake is drum brakes equipped on the front axle export flange.
Electrical system	■ With 2*12V maintenance-free battery and mechanical power main switch, power of the whole machine can be cut off manually.

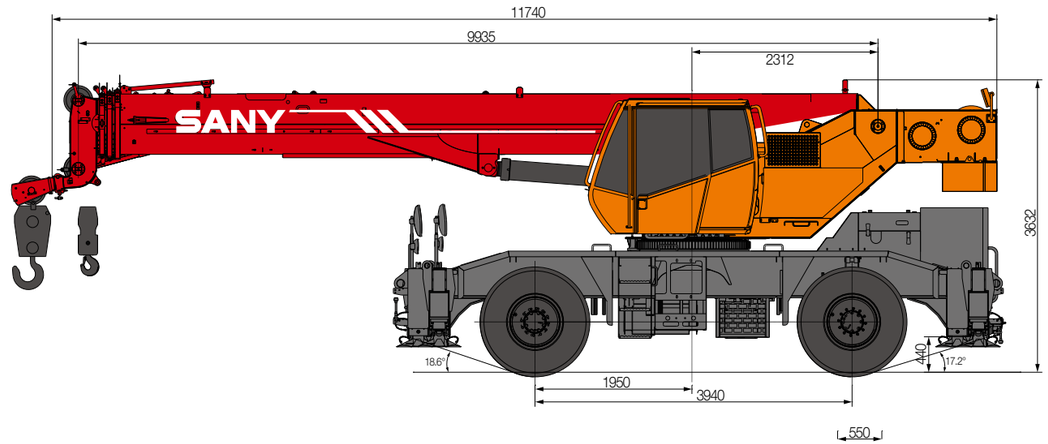

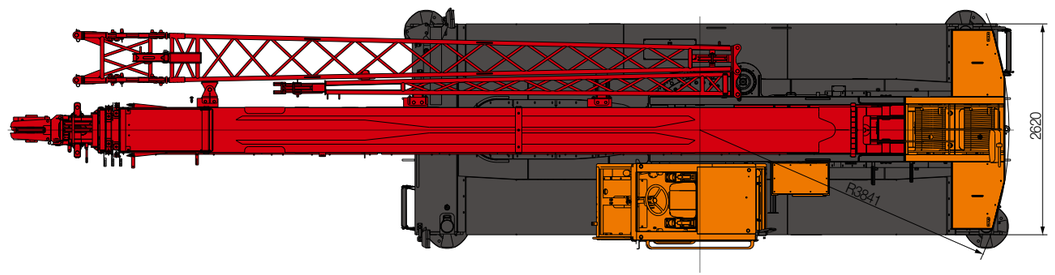

Type	Item		Parameter
Capacity	Max. lifting capacity		25 t
Dimensions	Overall length		11740 mm
	Overall width		2620 mm
	Overall height		3600 mm
	Axle distance		3940 mm
Weight	Overall weight		27400 kg
	Axle load	Front axle load	13700 kg
		Rear axle load	13700 kg
Engine	Rated power		154 kW/ 2200 rpm
	Rated torque		800 N.m/ 1400 rpm
Traveling	Max.traveling speed		40 km/h
	Turning radius	Min.turning radius	8.5 /5.5 m
	Wheel formula		4×4
	Min.ground clearance		350 mm
	Approach angle		18.6 °
	Departure angle		17.2 °
	Max.gradeability		55%
Main Performance Data	Temperature range		– 20 ° ~ + 46 °
	Min.rated range		3 m
	Tail slewing radius of swingtable		3.841 m
	Boom section		4
	Boom shape		U-shaped
	Max.lifting moment	Base boom	968kN·m
		Full-extend boom	605kN·m
		Full-extend boom+jib	243 kN·m
	Boom length	Base boom	9.9 m
		Full-extend boom	31.5 m
		Full-extend boom+jib	45.2 m
	Outrigger span (Longitudinal×Transversal)		6.7 × 6.5 m
	Jib offset		0 °, 15 °, 30 °
Working speed	Max.single rope lifting speed of main winch (no load)		125 m/min
	Max.single rope lifting speed of auxiliary winch (no load)		125 m/min
	Full extension/retraction time of boom		65 / 40 s
	Full lifting/descending time of boom		45 / 60 s
	Slewing speed		2.5 r/min
Air condition	Superstructure / Chassis		Cooling/Heating & Cooling

SRC250A1 Working Ranges

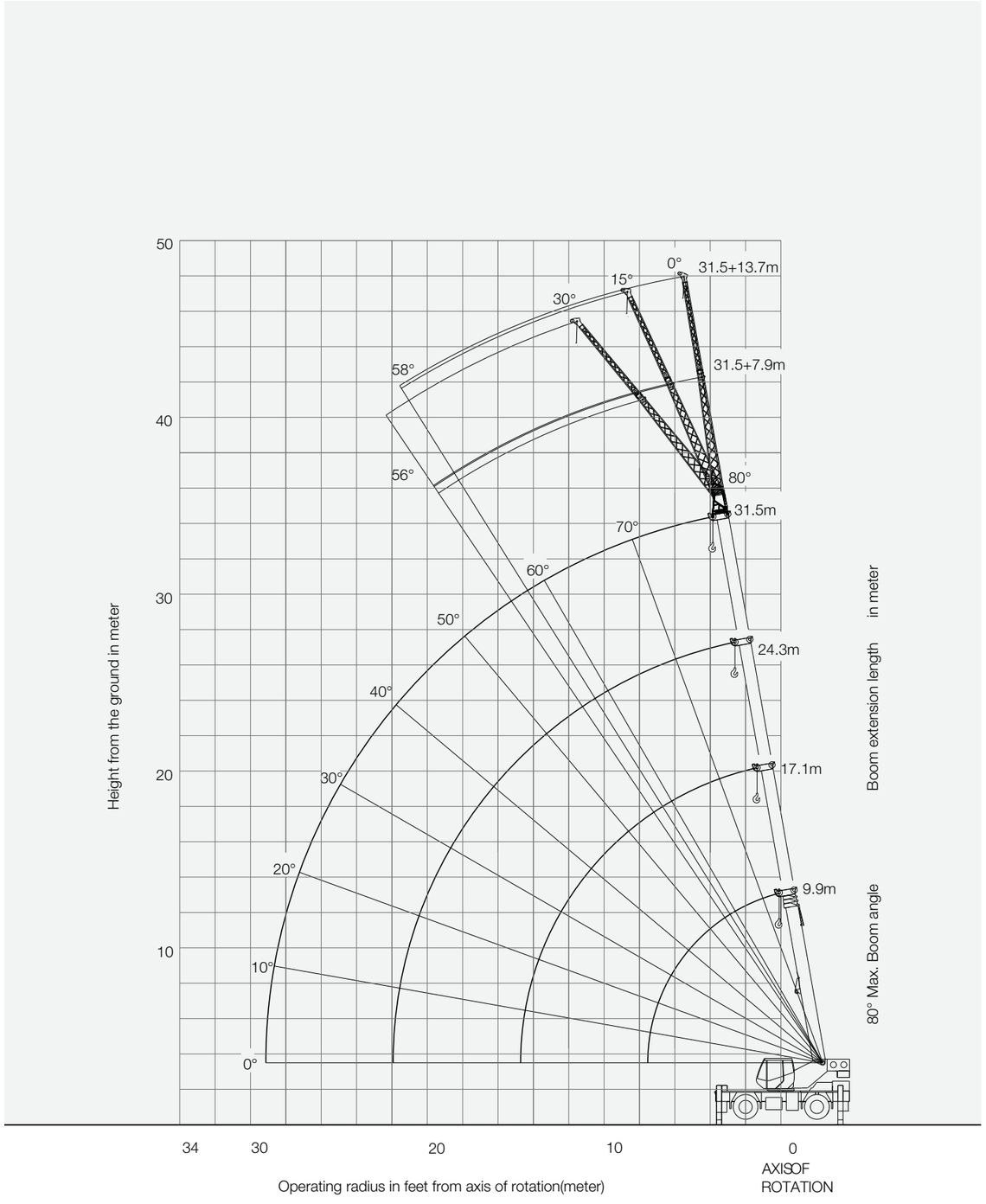

Prerequisites:
① Boom operating conditions:9.9m-31.5m
② The span of outriggers is 6.7m×6.5m
③ 360°rotation is applied
④ Counterweight is 1.5T

Working range (m)	Main Boom(m)				Working range (m)
	9.9	17.1	24.3	31.5	
3	25.00				3
3.5	25.00	19.00			3.5
4	23.00	19.00			4
4.5	21.20	18.00			4.5
5	19.40	16.70	12.50		5
5.5	17.80	15.60	11.75		5.5
6	16.30	14.60	11.10		6
6.5	15.20	13.80	10.50	7.00	6.5
7	13.70	13.00	10.00	7.00	7
8		11.00	9.00	7.00	8
9		8.90	8.20	6.30	9
10		7.40	7.60	5.80	10
11		6.10	6.70	5.30	11
12		5.20	5.70	5.15	12
13		4.40	5.00	4.70	13
14		3.70	4.30	4.30	14
15			3.70	4.00	15
16			3.30	3.60	16
17			2.90	3.20	17
18			2.50	2.80	18
19			2.20	2.50	19
20			2.00	2.30	20
21			1.80	2.00	21
22				1.80	22
24				1.45	24
26				1.20	26
28				1.00	28
Min angle (°)	0.00	0.00	0.00	0.00	Min angle (°)
Parts of line	8	6	4	3	Parts of line

Prerequisites:
① Boom operating conditions:9.9m-31.5m
② The span of outriggers is 6.7m×5m
③ 360°rotation is applied
④ Counterweight is 1.5T

Working range (m)	Main Boom(m)				Working range (m)
	9.9	17.1	24.3	31.5	
3	25.00				3
3.5	25.00	19.00			3.5
4	23.00	19.00			4
4.5	21.20	18.00			4.5
5	18.60	16.70	12.50		5
5.5	15.50	15.20	11.75		5.5
6	12.90	12.70	11.10		6
6.5	10.80	10.90	10.50	7.00	6.5
7	9.30	9.50	10.00	7.00	7
8		7.40	8.20	7.00	8
9		5.90	6.60	6.30	9
10		4.80	5.50	5.60	10
11		4.00	4.60	4.80	11
12		3.30	3.90	4.10	12
13		2.70	3.30	3.50	13
14			2.85	3.00	14
15			2.40	2.60	15
16			2.00	2.20	16
17			1.70	1.90	17
18			1.50	1.60	18
19			1.30	1.40	19
20				1.20	20
Min angle (°)	0.00	0.00	25.00	43.00	Min angle (°)

Prerequisites:
① Boom operating conditions:9.9m-31.5m
② The span of outriggers is 6.7m×3.6m
③ 360°rotation is applied
④ Counterweight is 1.5T

Working range (m)	Main Boom(m)				Working range (m)
	9.9	17.1	24.3	31.5	
3	25.00				3
3.5	20.00	19.00			3.5
4	14.70	15.70			4
4.5	11.40	12.60			4.5
5	9.10	10.20	10.70		5
5.5	7.50	8.50	8.90		5.5
6	6.20	7.20	7.60		6
6.5	5.20	6.20	6.50	6.70	6.5
7	4.40	5.30	5.70	5.80	7
8		4.10	4.40	4.60	8
9		3.20	3.50	3.60	9
10		2.50	2.80	2.90	10
11		1.90	2.20	2.40	11
12		1.50	1.80	1.90	12
13		1.10	1.40	1.50	13
14			1.10	1.20	14
15				1.00	15
Min angle (°)	0	20	42	55	Min angle (°)

Prerequisites:
① Boom operating conditions(fully extended boom length+jib length), max.length is 31.5m+7.9/13.7m
② The span of outriggers is 6.7m×6.5m
③ 360°rotation is applied
④ Counterweight is 1.5T

Working angle (°)	7.9			13.7			Working angle (°)
	0	15	30	0	15	30	
80	3000	2100	1600	2000	1200	800	80
78	3000	2100	1600	2000	1200	800	78
75	3000	2000	1550	1950	1150	800	75
73	2800	1900	1500	1750	1100	800	73
71	2600	1800	1400	1600	1050	750	71
68	2300	1650	1250	1450	1000	700	68
66	2100	1550	1150	1350	950	660	66
63	1800	1350	1000	1150	850	600	63
61	1500	1200	850	1050	750	550	61
58	1100	950	650	650	600	500	58
56	700	650	500	500			56
Min. angle(°)	50.00	52.00	52.00	52.00	55.00	55.00	Min. angle(°)

SRC250A1 ROUGH-TERRAIN CRANE

LOAD CHART

Prerequisites:
① Boom operating conditions:9.9-24.3m
② With tyre static lifting load
③ Front and 360°rotation is applied
④ Counterweight is 1T

Radius (m)	9.9		17.1		24.3	Radius (m)
	FRONT	360°	FRONT	360°	FRONT	
3.5	12.5	5.8				3.5
4	11	4.3	7.5	5.2		4
4.5	9.8	3.2	7.5	4.1	6	4.5
5	8.5	2.4	6.8	3.2	5.8	5
5.5	7	1.8	6	2.6	5.3	5.5
6	5.8	1.3	5.4	2.1	4.8	6
6.5	5		4.8	1.6	4.4	6.5
7			4.2	1.3	4	7
8			3.3		3.4	8
9			2.6		2.9	9
10			2.1		2.5	10
11			1.7		2.1	11
12			1.4		1.8	12
13					1.5	13
14					1.25	14
15					1.3	15

Prerequisites:
① Boom operating conditions:9.9-24.3m
② Creep (traveling with load),1.6km/h
③ Front side only
④ Counterweight is 1T

Radius (m)	9.9	17.1	24.3	Radius (m)
	FRONT	FRONT	FRONT	
3.5	8			3.5
4	7.2	6		4
4.5	6.6	6	4.4	4.5
5	6	5.6	4.4	5
5.5	5.4	4.9	4.1	5.5
6	4.6	4.4	3.8	6
6.5	4	3.9	3.5	6.5
7		3.5	3.3	7
8		2.7	2.8	8
9		2.1	2.3	9
10		1.7	1.9	10
11		1.3	1.6	11
12		1	1.3	12
13			1.1	13
14				14
15				15

SRC250A1 ROUGH-TERRAIN CRANE

WHEEL CRANE FAMILY MAP

TRUCK CRANE


STC200
Maximum Load Capacity: 20t
Telescopic Boom: 4 Sections, 10.6-33m


STC250
Maximum Load Capacity: 25t
Telescopic Boom: 4 Sections, 10.65-33.5m


STC250H
Maximum Load Capacity: 25t
Telescopic Boom: 5 Sections, 10.5-39.5m


STC300S
Maximum Load Capacity: 30t
Telescopic Boom: 5 Sections, 10.6-40.5m


STC300TH
Maximum Load Capacity: 30t
Telescopic Boom: 4 Sections, 10.6-33.5m


STC300H
Maximum Load Capacity: 30t
Telescopic Boom: 5 Sections, 10.5-39.5m


STC500
Maximum Load Capacity: 50t
Telescopic Boom: 5 Sections, 11.5-43m


STC550
Maximum Load Capacity: 55t
Telescopic Boom: 5 Sections, 11.5-43m


STC600S
Maximum Load Capacity: 60t
Telescopic Boom: 5 Sections, 11.3-43.5m


STC750
Maximum Load Capacity: 75t
Telescopic Boom: 5 Sections, 11.8-45m


STC800S
Maximum Load Capacity: 80t
Telescopic Boom: 5 Sections, 12.2-47m


STC1000
Maximum Load Capacity: 100t
Telescopic Boom: 5 Sections, 13.5-52m


STC1000C
Maximum Load Capacity: 100t
Telescopic Boom: 6 Sections, 13.25-60m


STC1000S
Maximum Load Capacity: 100t
Telescopic Boom: 5 Sections, 12.26-56m


STC1200S
Maximum Load Capacity: 120t
Telescopic Boom: 7 Sections, 12.6-63.5m


STC1300C
Maximum Load Capacity: 130t
Telescopic Boom: 6 Sections, 13.3-60m


STC1600
Maximum Load Capacity: 160t
Telescopic Boom: 6 Sections, 13.4-62m


STC2200
Maximum Load Capacity: 220t
Telescopic Boom: 6 Sections, 14.35-68m

ALL TERRAIN CRANE


SAC1800
Maximum Load Capacity: 180t
Telescopic Boom: 6 Sections, 13.5-62m


SAC2200
Maximum Load Capacity: 220t
Telescopic Boom: 6 Sections, 13.5-62m


SAC2600
Maximum Load Capacity: 260t
Telescopic Boom: 6 Sections, 15.65-73m


SAC3000
Maximum Load Capacity: 300t
Telescopic Boom: 7 Sections, 15.4-83m


SAC3500
Maximum Load Capacity: 350t
Telescopic Boom: 6 Sections, 15.2-70m


SAC6000
Maximum Load Capacity: 600t
Telescopic Boom: 7 Sections, 17.1-90m

ROUGH-TERRAIN CRANE


SRC250
Maximum Load Capacity: 25t
Telescopic Boom: 4 Sections, 9.9-31.5m


SRC350
Maximum Load Capacity: 35t
Telescopic Boom: 4 Sections, 10-31.5m


SRC550
Maximum Load Capacity: 55t
Telescopic Boom: 4 Sections, 11.25-34.5m


SRC550H
Maximum Load Capacity: 55t
Telescopic Boom: 5 Sections, 11.5-43m


SRC750
Maximum Load Capacity: 75t
Telescopic Boom: 5 Sections, 11.8-45m


SRC1200
Maximum Load Capacity: 120t
Telescopic Boom: 5 Sections, 13-49m

Notes

Quality Changes the World

SANY AUTOMOBILE HOISTING MACHINERY

Address: SANY Industrial Park, Jinzhou Development Zone,
Changsha, Hunan, China.
Service Hotline: 4006098318
Email: crd@sany.com.cn
For more information, please visit: www.sanygroup.com

Version: 2018.8

Distributed By: